ASC Series One-Way Throttle Valve

Ordering Code ASC Series One-Way Throttle Valve

A S C — 2 0 0 - 0 8

- Type Code: ASC: One-Way Throttle Valve
- Series Code: 100:100 Series; 200:200 Series; 300:300 Series
- Joint Size: 06:G1/8″; 08:G1/4″; 10:G3/8″; 15:G1/2″



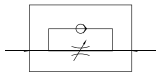

Specifications

Model		ASC100-06	ASC200-08	ASC300-10	ASC300-15
Working Medium		Clean air(40μm Filteration)			
Working Pressure		0~1.0Mpa			
Max.Pressure		1.2Mpa			
Working Temperature		0~60℃			
Body Material		Aluminum			
Standard rated flow	Throttle	200L/min	450L/min	1250L/min	1650L/min
	One way	400L/min	800L/min	1500L/min	2500L/min
Joint Size		G1/8"	G1/4"	G3/8"	G1/2"

Main Dimensions

ASC100、ASC200 Series

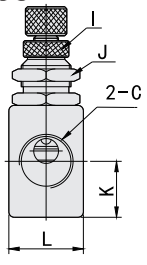

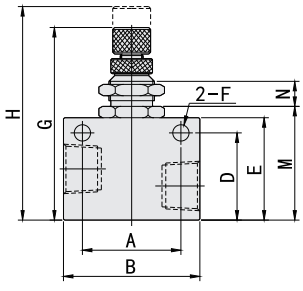

ASC300 Series

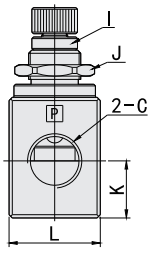

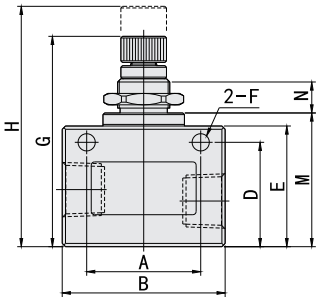

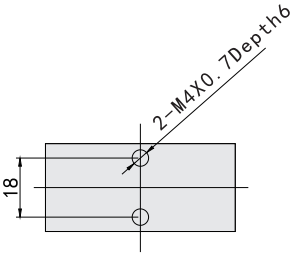

Model	A	B	C	D	E	F	G	H	I	J	K	L	M	N
ASC100-06	22	32	G1/8	18	23	4.3	46.8	52.3	M6X0.5	M12X0.75	10	18	26	8.6
ASC200-08	26	36	G1/4	23	27	4.3	50.8	56.3	M6X0.5	M12X0.75	13.5	18	30	8.6
ASC300-10	35	50	G3/8	32	37	5.3	65	74	M8X0.75	M16X1.0	17.5	28	40.5	10.2
ASC300-15	35	50	G1/2	32	37	5.3	65	74	M8X0.75	M16X1.0	17.5	28	40.5	10.2