V Series Air Treatment Units

Ordering Code VFC Series FRL Combination

VFC 200 - 02 - M - □ - □ - □

- VFC: Type code — VFC: Filter+Regulator +Lubricator
- 200: Series code — 200: 200 Body size; 300: 300 Body size; 400: 400 Body size
- 02: Port size — 01: G1/8; 02: G1/4; 03: G3/8; 04: G1/2; 06: G3/4
- M: Drain type — Nil: Semi-Auto drain type; M: Manual drain type; D: Auto drain type
- □: Filtration — Nil: 20μm; 5: 5μm
- □: Pressure gauge — Nil: Pressure gauge; N: Square embedded type pressure gauge; O: Without pressure gauge
- □: Thread type — Nil: G; N: NPT; R: Rc



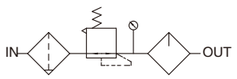

Product Feature

* The VFC consisted of VFR and VL, each unit can be ordered separately.
* The VF with water separator cleans the compressed air of fluid oil, condensation, and dirt particles. For special applications, a 20μm filter element can be replaced a by 5μm filter element.
* The VR maintains inputting constant operating pressure despite fluctuations in line pressure and the amount of air consumed.
* The proportional lubricator adds a regulated quantity of oil to the filtered air. The oil mist content is proportional to the flow and oil can be added during operation. The oil drip rate is controlled by the adjustable bolt. Normally, 1 to 12drops/1000L of air is sufficient.

Note

* Max pressure for V Series auto drain is 0.8Mpa.
* Max pressure for the Low-pressure type is 0.4Mpa.
* Pressure gauges are available at 10 bar or 16 bar, for other pressure ranges please contact VPC.

Specifications

Model		VFC200-01	VFC200-02	VFC200-03	VFC300-02	VFC300-03	VFC300-04	VFC400-02	VFC400-03	VFC400-04	VFC400-06
Working medium		Clean air (40μm Filteration)									
Port size		G1/8	G1/4	G3/8	G1/4	G3/8	G1/2	G1/4	G3/8	G1/2	G3/4
Filtration precision		20μm, 5μm									
Proof pressure		0.15 to 0.8Mpa/0.15 to 1.2Mpa									
Max. Working pressure		1.0Mpa/1.6Mpa									
Min. Working pressure		0.8Mpa/1.0Mpa									
Working temperature		5 to 60℃									
Drain bowl capacity		15cc			50cc			80cc			
Oil bowl capacity		30cc			100cc			160cc			
Recommend lubricant		ISO VG 32 or equivalent									
Component	Filter regulator	VFR200-01	VFR200-02	VFR200-03	VFR300-02	VFR300-03	VFR300-04	VFR400-02	VFR400-03	VFR400-04	VFR400-06
	Lubricator	VL200-01	VL200-02	VL200-03	VL300-02	VL300-03	VL300-04	VL400-02	VL400-03	VL400-04	VL400-06

V Series Air Treatment Units

Exploded View



V Series Air Treatment Units

Main Dimensions

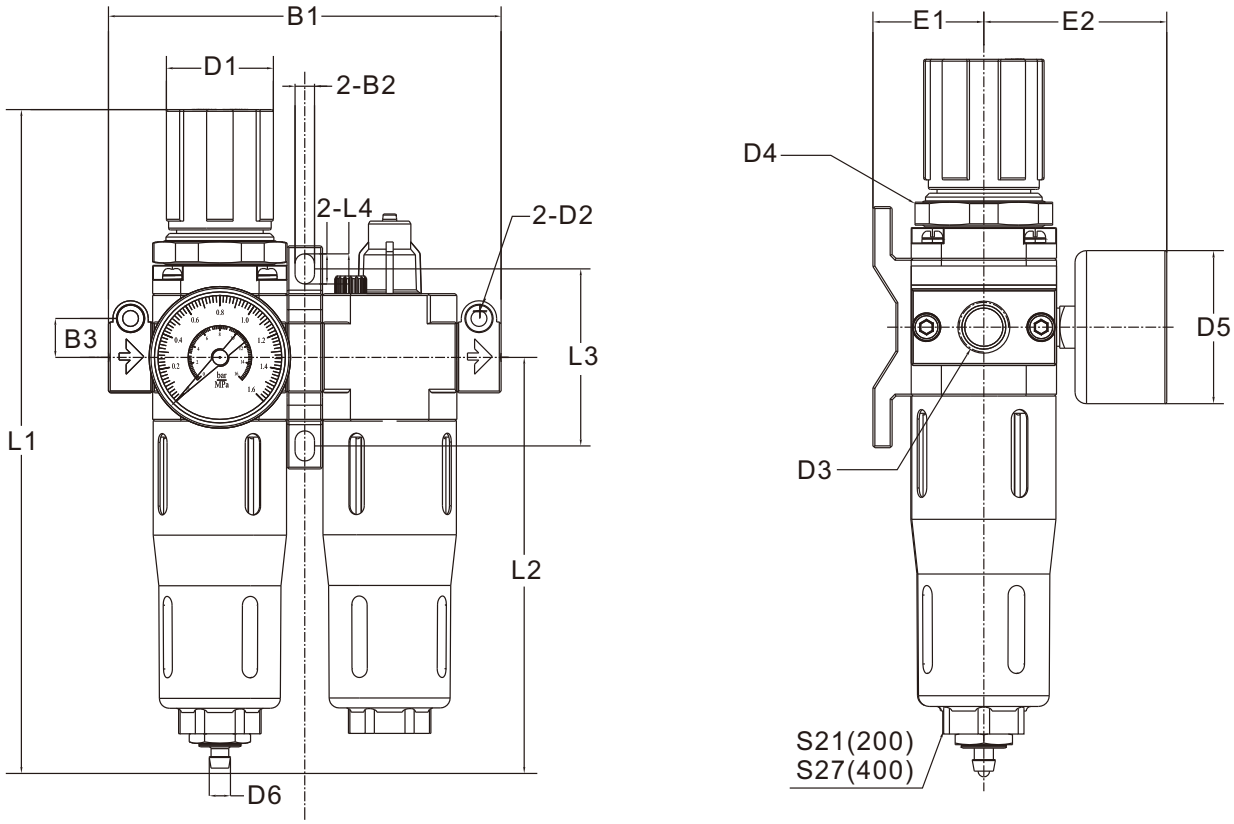

(mm)

Model	B1	B2	B3	D1	D2	D3	D4	D5	D6	E1	E2	L1	L2	L3	L4
VFC200-01	111	5.5	11	Φ30	Φ4.5	G1/8	M42×1.5	Φ40	Φ6	29	48	187.5	117.5	50	9
VFC200-02	111	5.5	11	Φ30	Φ4.5	G1/4	M42×1.5	Φ40	Φ6	29	48	187.5	117.5	50	9
VFC200-03	111	5.5	11	Φ30	Φ4.5	G3/8	M42×1.5	Φ40	Φ6	29	48	187.5	117.5	50	9
VFC300-02	129	2.5	–	Φ40	–	G1/4	M40×1.5	Φ41	Φ6	41	55	223.3	–	70	7.5
VFC300-03	129	2.5	–	Φ40	–	G3/8	M40×1.5	Φ41	Φ6	41	55	223.3	–	70	7.5
VFC300-04	129	2.5	–	Φ40	–	G1/2	M40×1.5	Φ41	Φ6	41	55	223.3	–	70	7.5
VFC400-02	146	6.5	16.5	Φ40	Φ5.5	G1/4	M32×1.5	Φ50	Φ6	39	55	240	150	70	10
VFC400-03	146	6.5	16.5	Φ40	Φ5.5	G3/8	M32×1.5	Φ50	Φ6	39	55	240	150	70	10
VFC400-04	146	6.5	16.5	Φ40	Φ5.5	G1/2	M32×1.5	Φ50	Φ6	39	55	240	150	70	10
VFC400-06	146	6.5	16.5	Φ40	Φ5.5	G3/4	M32×1.5	Φ50	Φ6	39	55	240	150	70	10